Table of Contents

Figure	*Title*
EA-9C102B	**POWER GENERATION/DISTRIBUTION (UP TO SN SC027)**
EA-9C102C	**POWER GENERATION/DISTRIBUTION (SN SC028 THRU SC039)**
EA-9C102D	**POWER GENERATION/DISTRIBUTION (FROM SN SC040)**
EA-9C102.2	Magneto System (up to SN SC005)
EA-9C102.2A	Magneto System (from SN SC006)
EA-9C102.3A	Strobe Light System
EA-9C102.4	Fuel Gages (up to SN SC019 and SC022)
EA-9C102.4A	Fuel Gages (from SN SC020 exc. SC022)
EA-9C102.5A	COM S/E Gerät
EA-94102.6	Audio Switches & Jacks
EA-9C102.7	Alternator Warning (up to SN SC002)
EA-9C102.7A	Alternator Warning (from SN SC003)
EA-9C102.8	Smoke System
EA-9C102.9	Battery Circuit (up to SN SC002)
EA-9C102.9B	Battery Circuit (SN SC003 thru SC027)
EA-9C102.9C	Battery Circuit (from SN SC028 thru SC049)
EA-9C102.9D	Battery Circuit (from SN SC050)
EA-9C102.10	Alternator System (up to SN SC002)
EA-9C102.10A	Alternator System (from SN SC003)
EA-9C102.11	Fuel Boost Pump
EA-94102.14C	Pedal Adjustment System
EA-9C102.15	Accelerometer
EA-9C102.16	External Power (up to SN SC002)
EA-9C102.16B	External Power (from SN SC003)
EA-93102.18A	Batterie Charger System
EA-93102.20A	Transponder TRT800-H
EA-93102.22	Transponder BXP6401
EA-93102.26	Transponder ATC4401
EA-9C102.27	Ampere Indication (up to SN SC002)
EA-9C102.27A	Ampere Indication (SN SC003 thru SC019 and SC022)
EA-9C102.27B	Ampere Indication (from SN SC020 exc. SC022)
EA-93102.28	Fuel Flow EDM700
EA-93102.29	Fuel Flow EDM800
EA-9C102.30	RPM Indication (up to SN SC005)
EA-9C102.30A	RPM Indication (from SN SC006)
EA-96102.31	Starter Engaged Light
EA-93102.33	Fuel Flow FS-450

EA-93102.34	Oil Press/Temp Indication
EA-9D102.34A	Oil Temp Press
EA-93102.41A	ELT Pointer 3000
EA-93102.42	ARTEX ME 406 ELT (up to SN SC027)
EA-9D102.42A	ARTEX ME 406 ELT (from SN SC028)
EA-93102.43	Transponder BXP-6401-x & Enc
EA-9C102.44A	Electric Trim System
EA-96102.49	RC Allen RCA2600
EA-9C102.58	EGT & CHT Indication
EA-9D102.58A	EGT & CHT Indication
EA-93102.59	Flight Timer
EA-9C102.69	ELT KANNAD 406 AF

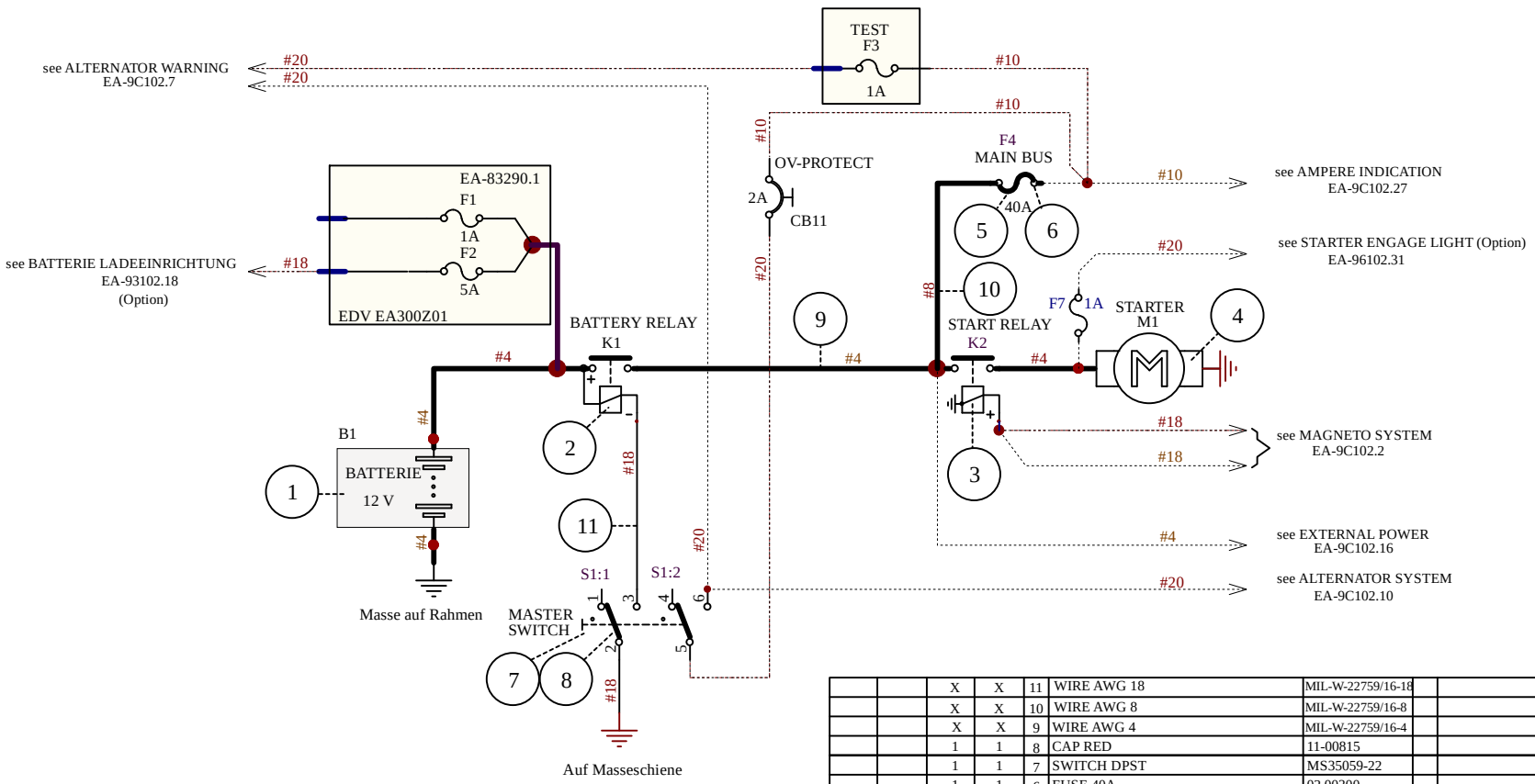

		X	X	11	WIRE AWG 18	MIL-W-22759/16-18				2,5	mtr		00776
		X	X	10	WIRE AWG 8	MIL-W-22759/16-8				0,4	mtr		FE00776
		X	X	9	WIRE AWG 4	MIL-W-22759/16-4				2,0	mtr		200005
		1	1	8	CAP RED	11-00815							31763
		1	1	7	SWITCH DPST	MS35059-22							01601
		1	1	6	FUSE 40A	02.00300							31664
		1	1	5	FUSEHOLDER	03.00360							31239
		1	1	4	STARTER	149-12LN							33865
		1	1	3	POWER SOLENOID INT	70-111-225-5							32978
		1	1	2	POWER SOLENOID CONT	111-226							00136
		1		1	BATTERIE 12V 11Ah	RG-12LSA		Fa. CONCORDE					33697
			1	1	BATTERIE 12V 24Ah	RG-25XC		Fa. CONCORDE					03617
04	03	02	01	Nr	Benennung	Teilekennzeichen	ZF	Werkstoff	Abmessungen	Menge	Einheit	Gewicht	MaWi-Nr.

Die Gültigkeitszuordnung von Version zu Flugzeugbaureihe ist der Bauakte bzw. dem jeweiligen Fertigungsauftrag zu entnehmen.

Zuordnung links / rechts wird mit */* in allen Feldern angegeben.

Letzte Bearbeitung:			
04			
03			
02			
01			
Ver.	Bezeichnung	Nr.:	Änderung/Mod. Nr.:	Datum	Name
D	ÄM-300-14-17	16.05.15	HW
C	ÄM-300-11-17	22.06.11	HW
B	ÄM-300-08-11	19.12.08	HW
A	ab SC006	11.07.08	HW

	Datum	Name
Bearb.:	05.05.08	HW
Gepr.:		
Gepr.:		

XTRA
Schwarze Heide 21
46569 Hünxe, Germany

Maßstab auf	Projektion
SI.-Klasse	Freimaßtoleranz
Oberflächenschutz	Oberfläche

EA 300/SC
BATTERY CIRCUIT

EA-9C102.9	**D**
A4	Blatt 1 von 1

Schutzvermerk nach DIN 34 beachten.

EDV-Kennung: **EA3C0909d**